WLM-ATLANTIC C – Curved Header

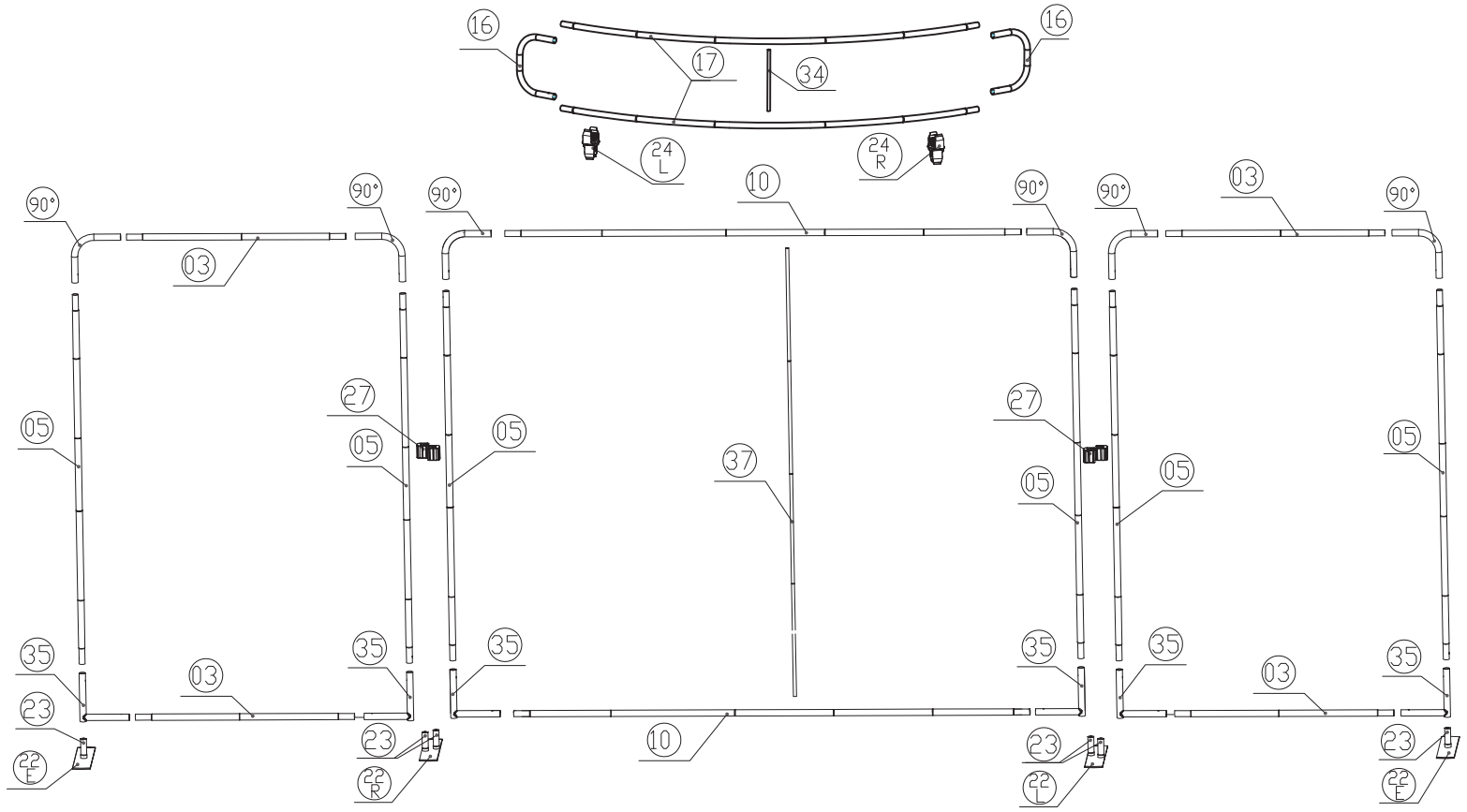

Setup Instructions

1. Take all the parts out of the bags and lay them on the ground according to the assembly diagram.
2. Make sure that all the corresponding numbers are correct.
3. Now start pushing the pipes together until they firmly click, if difficult you can slightly twist the parts together to make the locking spring pop up on place.
4. Its time to get your hands cleaned as now you are ready to handle the printed fabric. Feed the fabric from the round edges of the frame, feed only a few feet, then stand the frame up then slide the fabric to the bottom, now close the Zipper.
5. You can set up the feet in the position that you want to erect the stand, lift the fabric panels and fit on the feet.
6. To lock the frames together you can use the "S" shaped brackets, they are designed tight so they lock well.
7. If you have a header in the kit you can fix to the top by using the clear plastic clips.

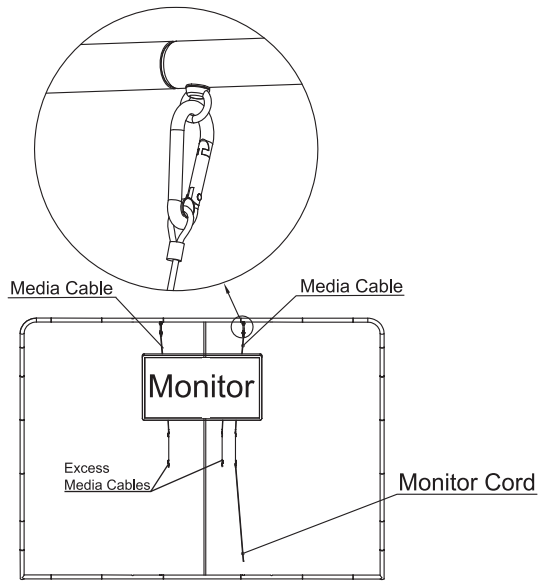

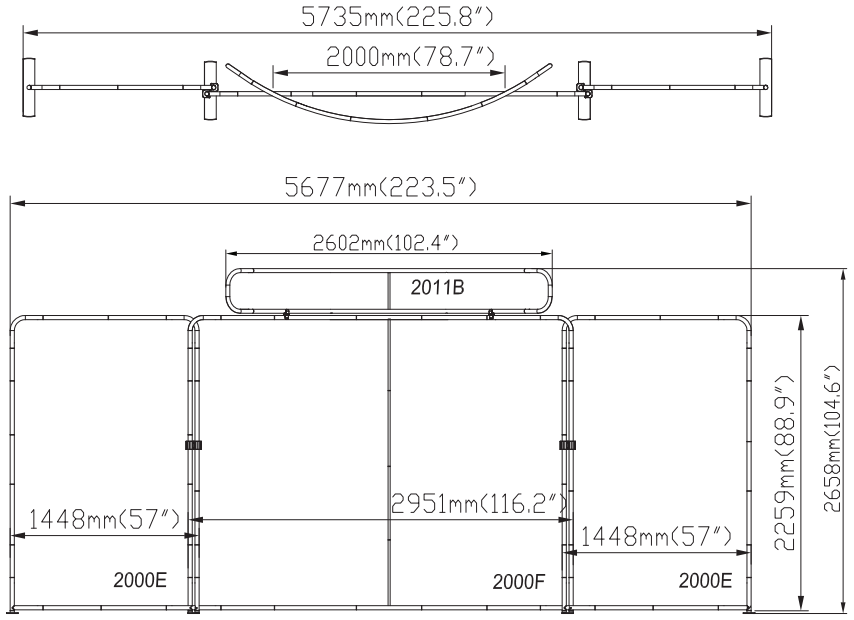

Frame			Frame			Frame			Frame			Frame			Frame			TV kit		Shipping Case		accessories
27	2		22 R	1		24 L	1											22.6"		CA900		
23	6		22 L	1		16	2											32"		CA500		
10	2		22 E	2		34	1											40"				
05	6		37	1		17	2															
03	4		35	6		90°	6		24 R	1												
NO.	Quantity	Confirm	NO.	Quantity	Confirm	NO.	Quantity	Confirm	NO.	Quantity	Confirm	NO.	Quantity	Confirm	NO.	Quantity	Confirm	NO.	Confirm	NO.	Confirm	