# vector tabletop

Vector Tabletop Kit 04

Side Wing:
Total graphic area: 9.125”w X 40.25”h
Total visual area: 8.125”w X 39.25”h

Please be sure to include the 1/2” bleed around the perimeter to compensate for the finishing of the rigid sintra graphics.

Center Graphic
Total graphic area: 82.625”w X 43.25”h
Total visual area: 78.625”w X 39.25”h

Please be sure to include the 2” bleed around the perimeter of the graphic. Do not design any critical elements (text, logos, etc.) within 1” of the edge (see dotted line and gray area).

Please extend bleed all the way out to the black border.
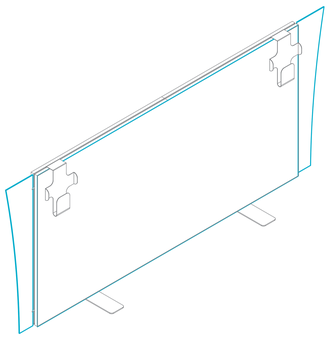
General Artwork Guidelines
- cmyk color mode
- do not embed images, supply them
- resolution must be 100-120 ppi
- all fonts must be created to outlines