Merchandise Express
Kit 4

TEMPLATE @ 1/2 SIZE

Graphic Panels A, B and C
Total Graphic Area: 40.875"w x 97.25"h
Finished Graphic Area: 36.875"w x 93.25"h

Please be sure to include a 2" bleed around the perimeter of each graphic.

Please consider obstructions and spaces created by the extrusions when designing your graphics.

General Art Guidelines:

– CMYK Color

– Do not embed images, supply them

– Resolution must be 200-240 ppi @ half size, 100-120 ppi @ full size

– All fonts must be created to outlines

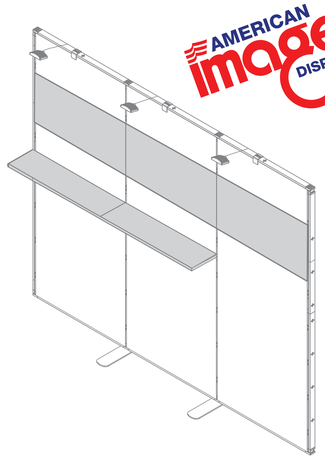

This template is ready to be opened in Adobe Illustrator to use as a 50% scale template layer.

If designing in Photoshop, please ensure you follow these dims "exactly" at 100% scale.

Full graphic requirements and upload instructions are here:
http://www.american-image.com/prepare-upload-your-graphic-files/
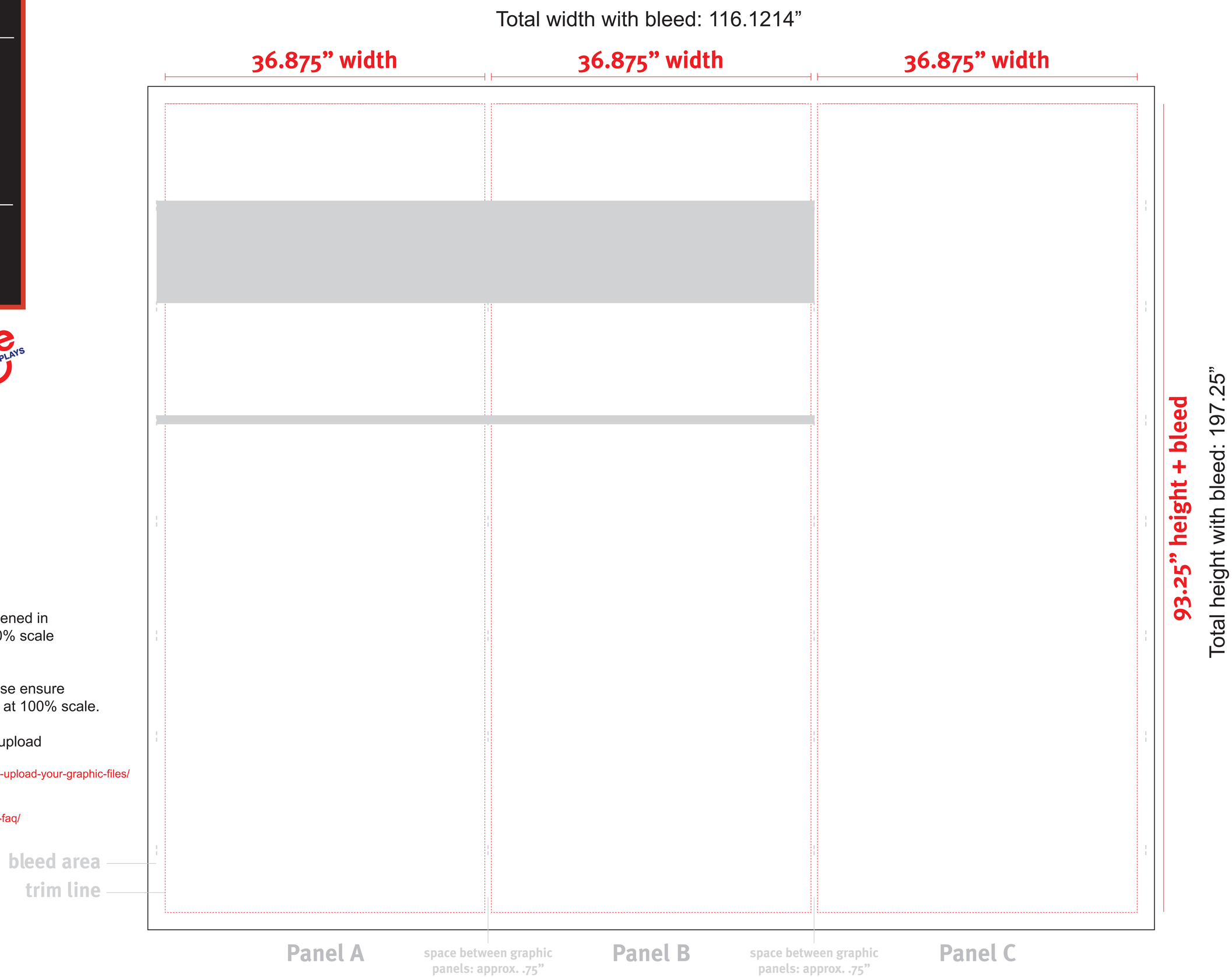
Read our graphic FAQ's here:
http://www.american-image.com/graphic-faq/