2x3 Straight V-Burst With Endcaps

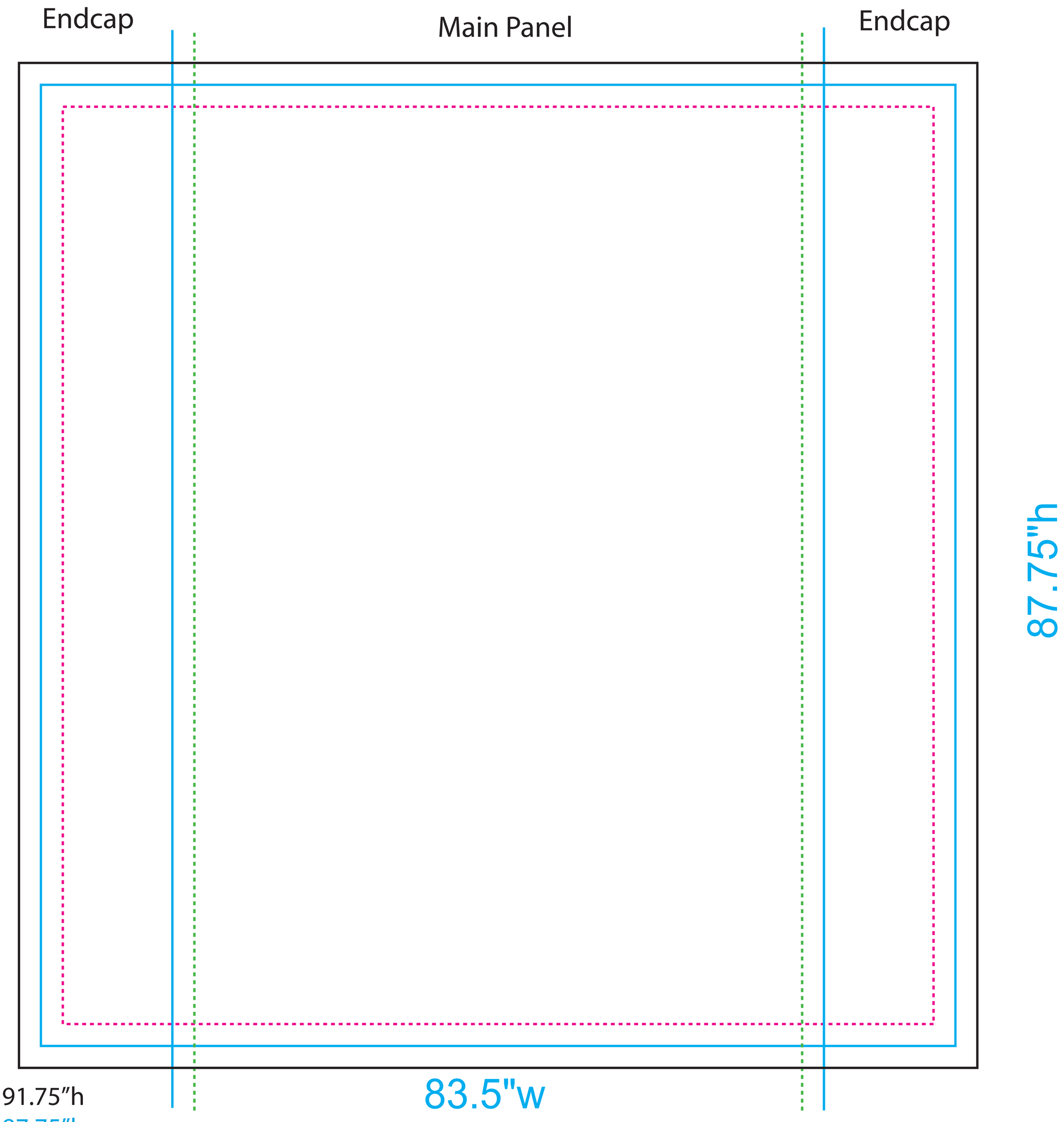

Print Size: 87.5"w x 91.75"h
Final Size: 83.5"w x 87.75"h
Endcap width: 12"
Stitching area: 79.5"w x 83.75"h
Live Area: 2" in from left and right edge of graphic

Please make sure text and images are at least 1" away from stitching and panel break.

4x3 Straight V-Burst With Endcaps

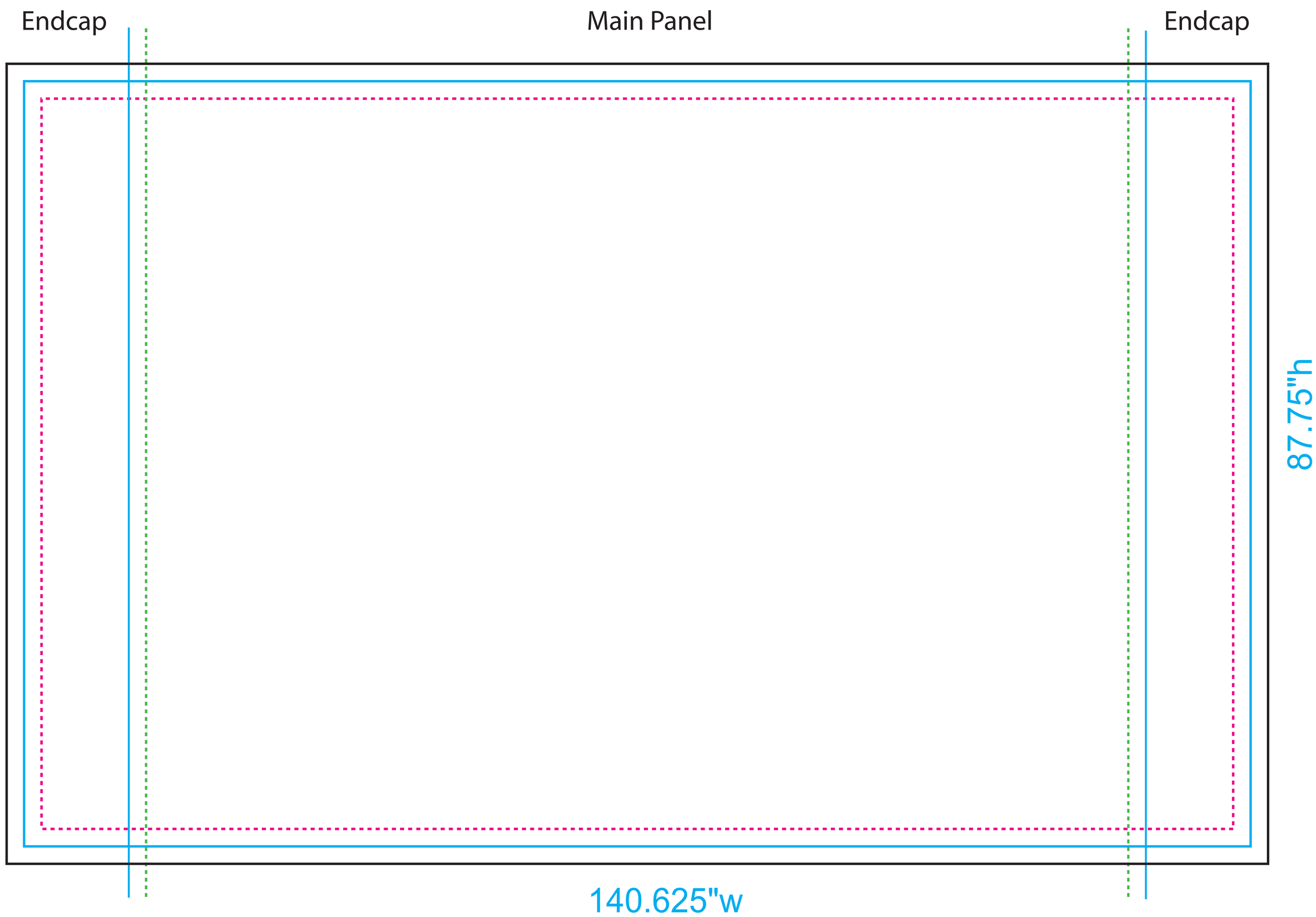

Print Size: 144.625”w x 91.75”h
Final Size: 140.625”w x 87.75”h
Endcap width: 12”
Stitching area: 136.625”w x 83.75”h
Live Area: 2” in from left and right edge of graphic

Please make sure text and images are at least 1”
away from stitching and panel break.

Form Fitted Burst DSI Case Cover
Logo on Front and Back

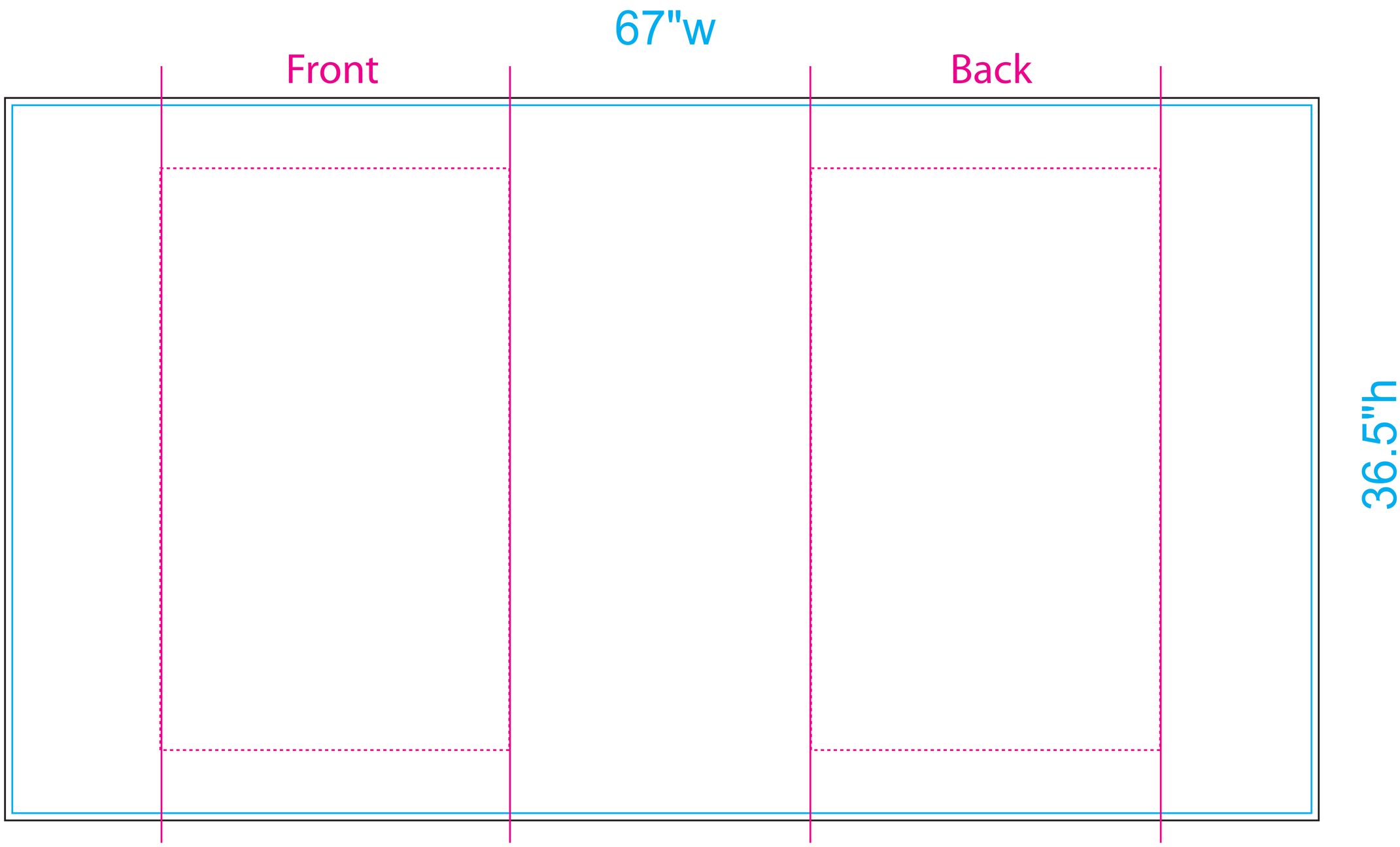

Print Size: 67.75”w x 37.25”h
Final Size: 67”w x 36.5”h
Live Area: 18”w x 30”h (centered)

Form Fitted Burst DSI Case Cover
Logo on Front ONLY

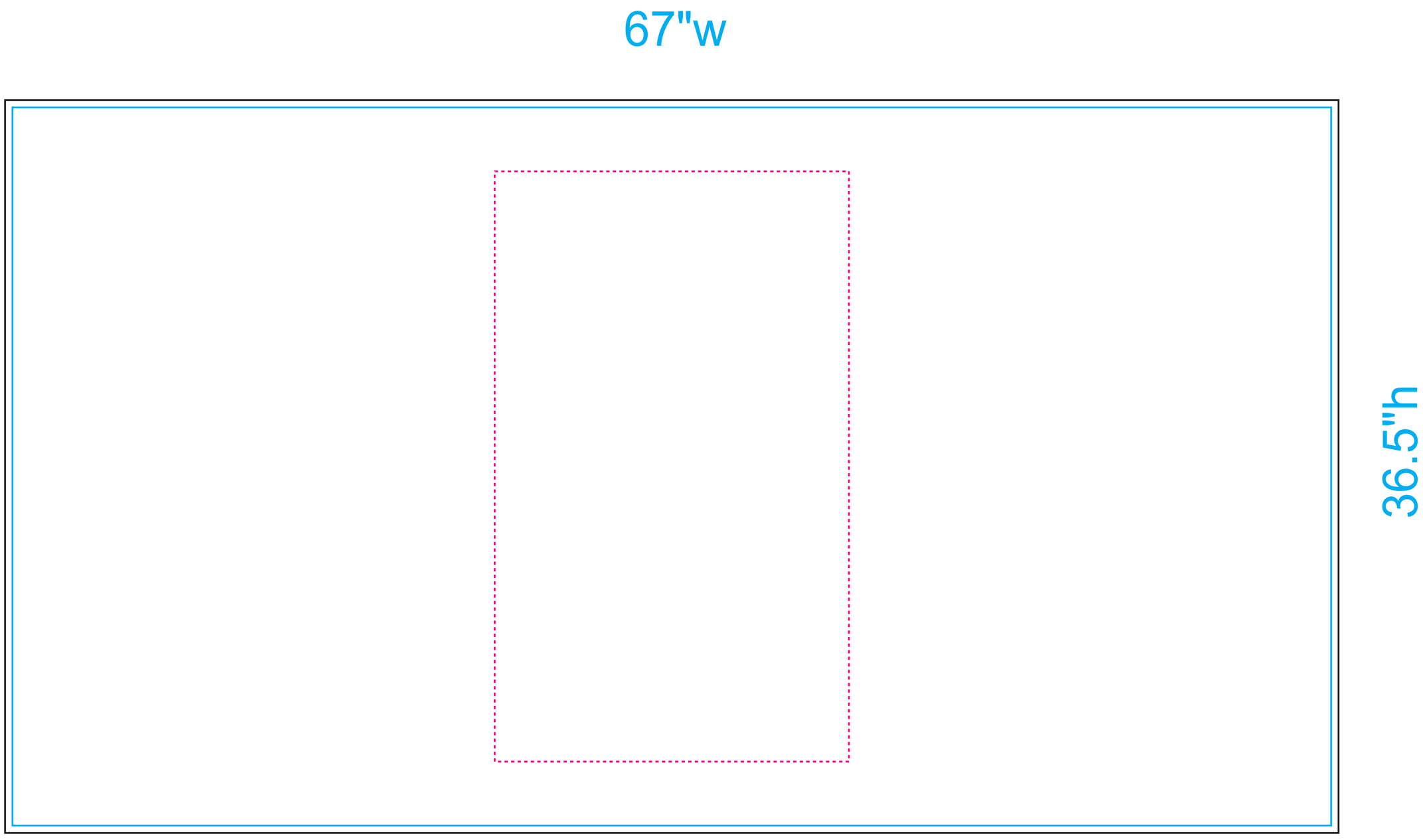

Print Size: 67.75”w x 37.25”h
Final Size: 67”w x 36.5”h
Live Area: 18”w x 30”h (centered)

Draped Burst DSI Case Cover
Logo on Front and Back

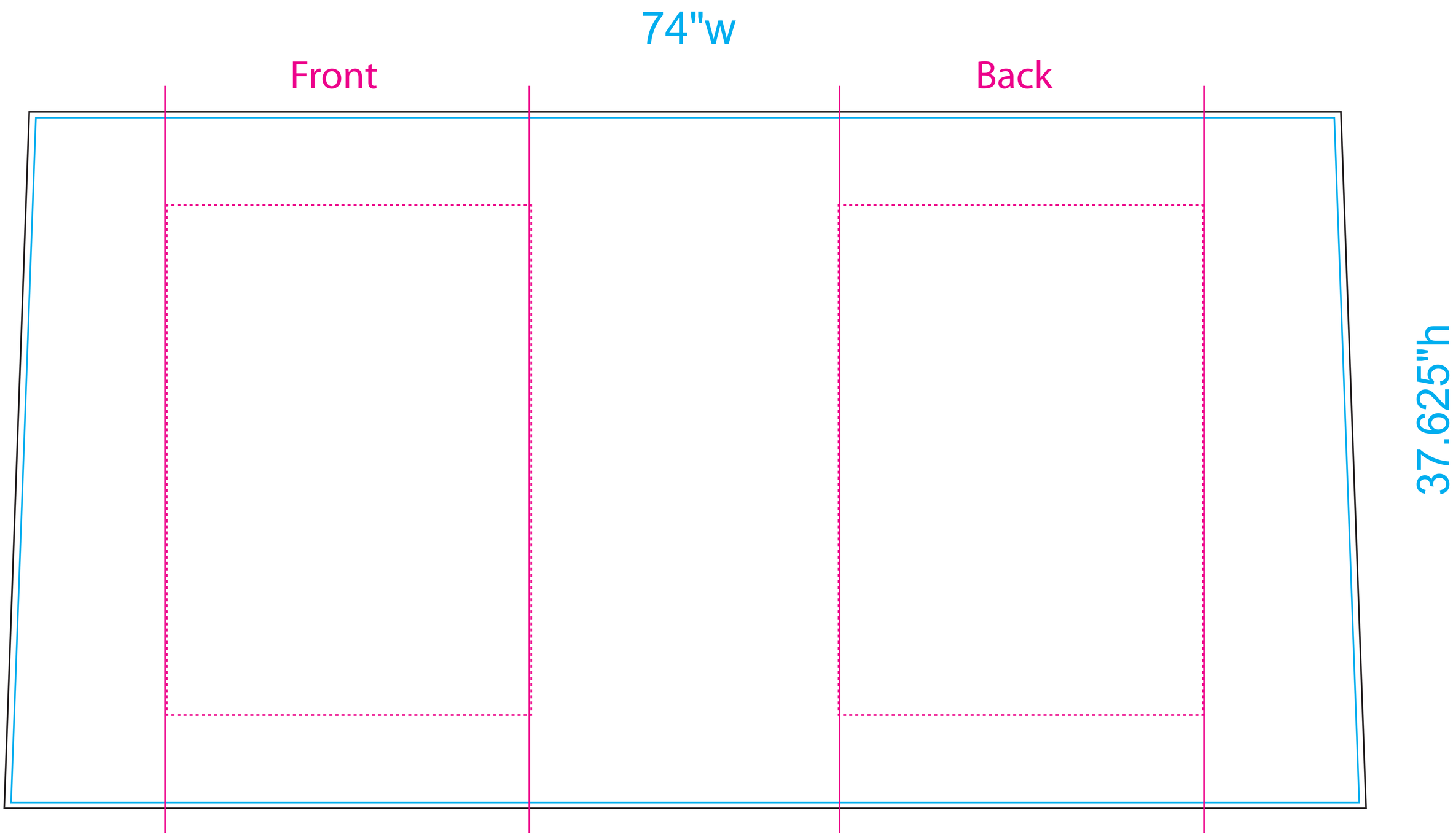

Print Size: 74.75”w x 38.25”h
Final Size: 74”w x 37.625”h
Live Area: 20”w x 28”h (on front and back)

Draped Burst DSI Case Cover
Logo on Front ONLY

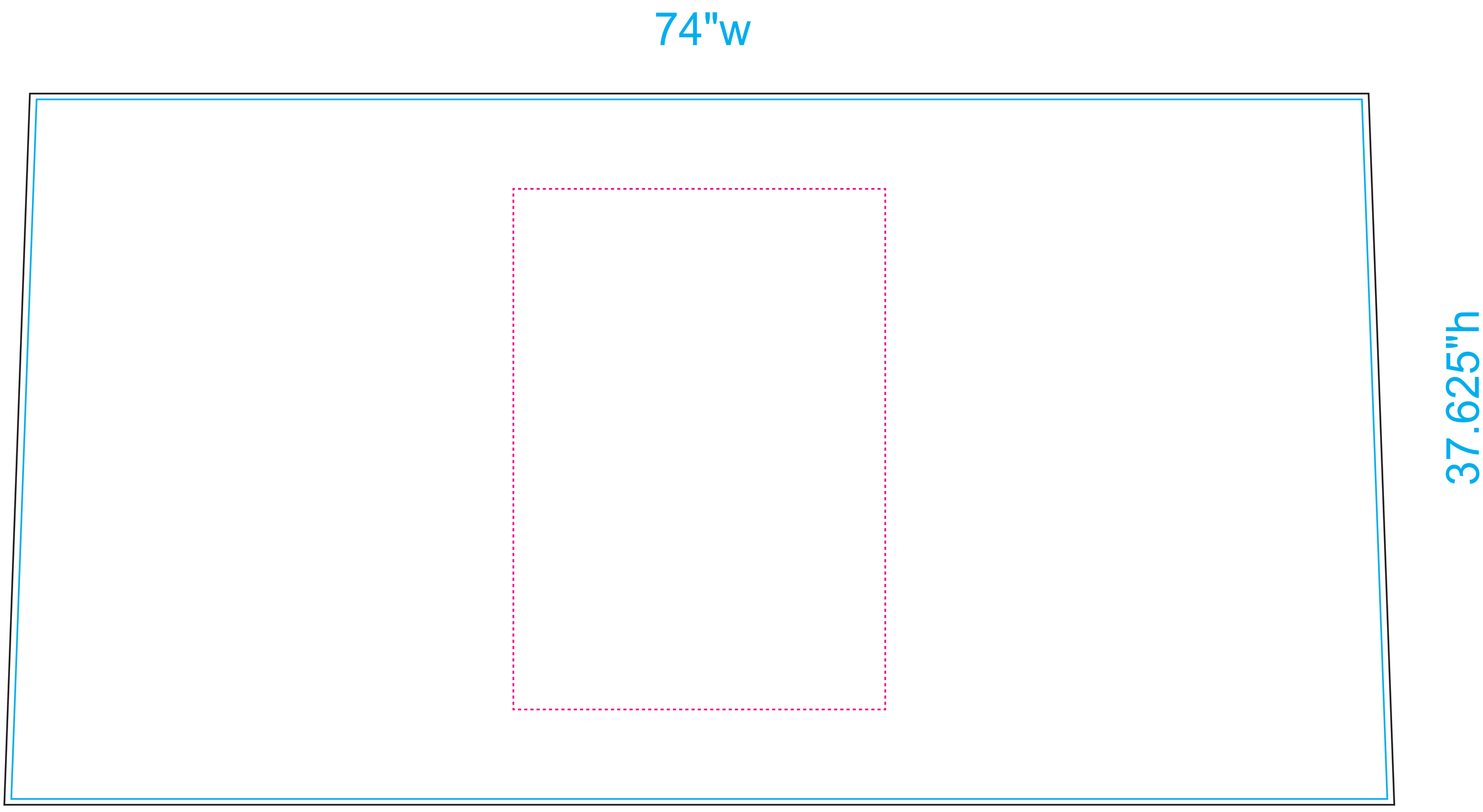

Print Size: 74.75”w x 38.25”h
Final Size: 74”w x 37.625”h
Live Area: 20”w x 28”h (centered)

Burst DSI Case Cover Top

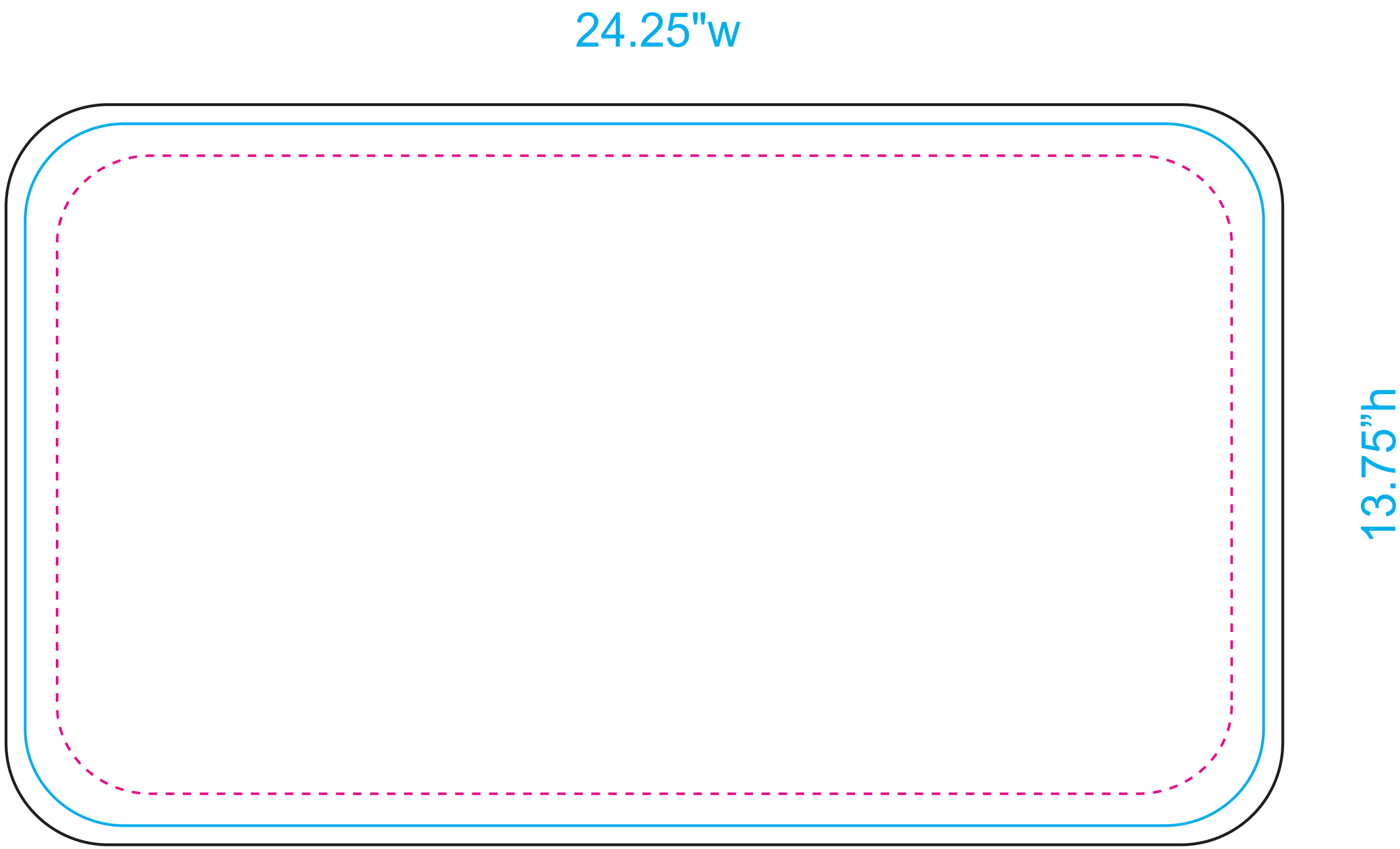

Print Size: 25”w x 14.5”h
Final Size: 24.25”w x 13.75”h
Live Area: 23”w x 12.5”h