pulse kit 1

Foreground:
Total graphic area: 117”w X 96”h
Total visual opening: 111.8”w X 92”h
See foreground template for specifics curves, bleeds & dimension

Background:
Total graphic area: 118”w X 96”h
Total visual opening: 114”w X 92”h
See foreground template for specifics curves, bleeds & dimension

Header:
Total graphic area: 48.836”w X 15.0375”h
Total visual area: 47.836”w X 14.0375”h
See header template for specific curves & dimensions

Counter will be constructed & finished with a laminate. Please consider placement when designing your graphic elements. Size and placement on template represents acutal size.

Counter size is 66“w X 39.875”h

Please be sure to include the 2” bleed around the perimeter to compensate for the finishing of large graphics. Do not design any critical elements (text, logos, etc.) within 2” of the edge (see dotted lines).

This template displays the whole pulse kit 1 structure for reference of counter and overlapping elements. Please save final artwork files with proper bleeds in the individual templates.

General Artwork Guidelines
- cmyk color mode
- do not embed images, supply them
- resolution must be 100-120 ppi
- all fonts must be created to outlines

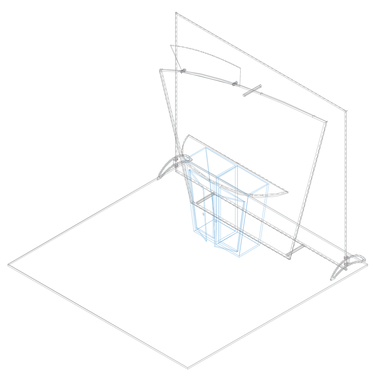

www.american-image.com

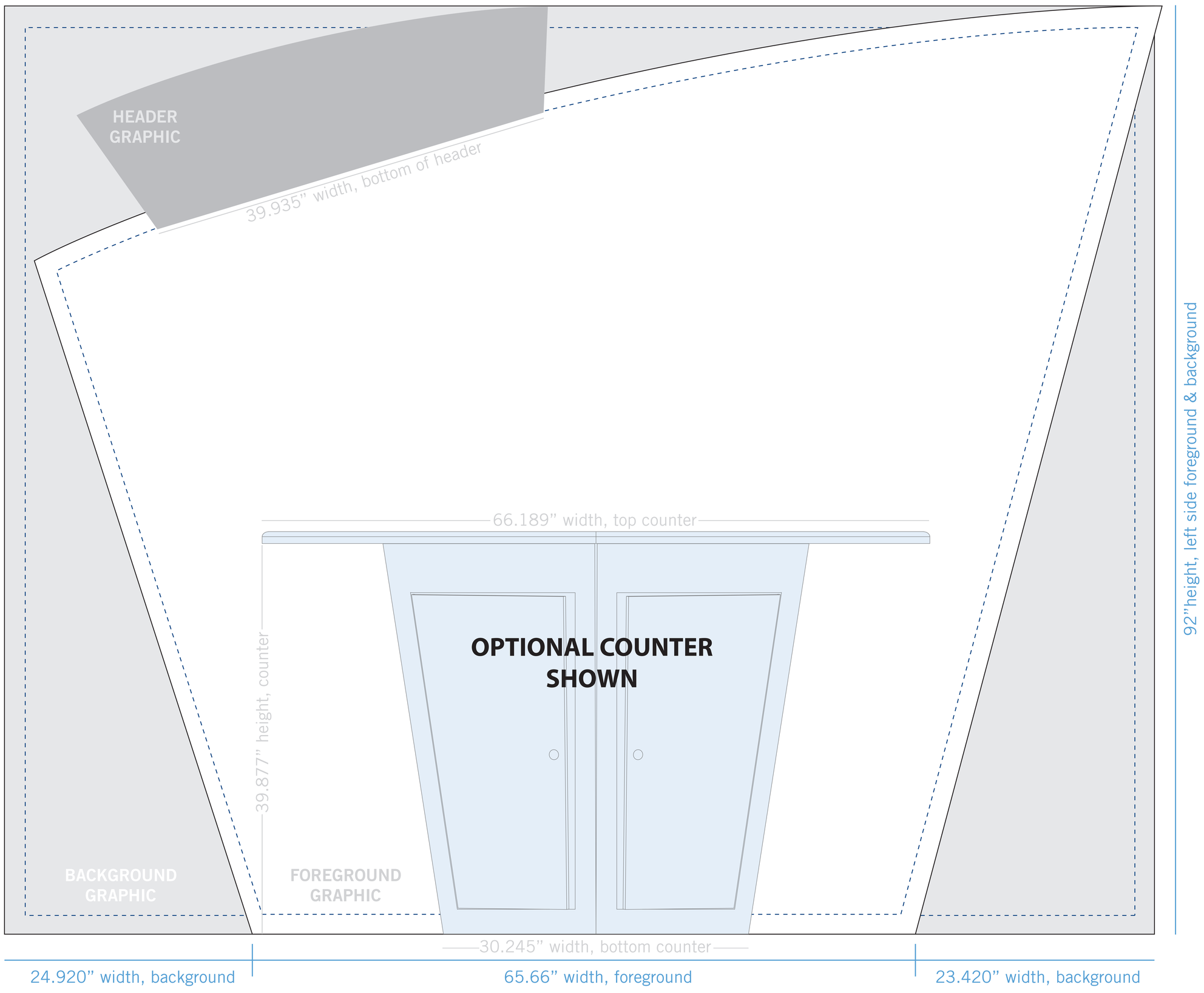

IMPORTANT: Please review the American Image Displays graphic requirements and upload instructions prior to preparing your layouts.
http://www.american-image.com/trade-show-displays/submit.shtml

REMINDER: This page is only for viewing obstructions & layers. Please do not design final artwork on this page.
Rather, please use individual “section” templates for each graphic element.

The template pages in this file can each be individually opened in Adobe Illustrator for use as a template layer.

pulse kit 1

Background Graphic Template
Total graphic area: 118”w X 96”h
Total visual opening: 114”w X 92”h

Please be sure to include the 2” bleed around the perimeter to compensate for the finishing of large graphics. Do not design any critical elements (text, logos, etc.) within 2” of the edge (see dotted lines).

General Artwork Guidelines
- cmyk color mode
- do not embed images, supply them
- resolution must be 100-120 ppi
- all fonts must be created to outlines

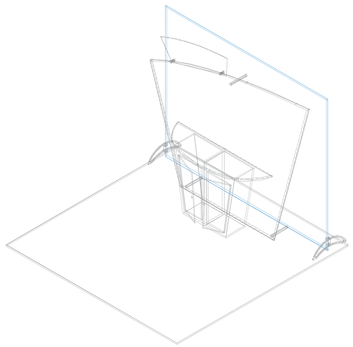

pulse kit 1

Foreground Graphic Template
Total graphic area: 117”w X 96”h
Total visual opening: 111.8”w X 92”h
See template for curve dimensions

Please be sure to include the 2” bleed around the perimeter to compensate for the finishing of large graphics. Do not design any critical elements (text, logos, etc.) within 2” of the edge (see dotted lines).

General Artwork Guidelines
- cmyk color mode
- do not embed images, supply them
- resolution must be 100-120 ppi
- all fonts must be created to outlines

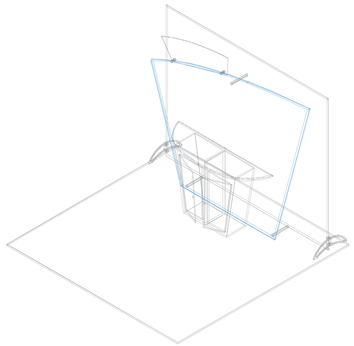

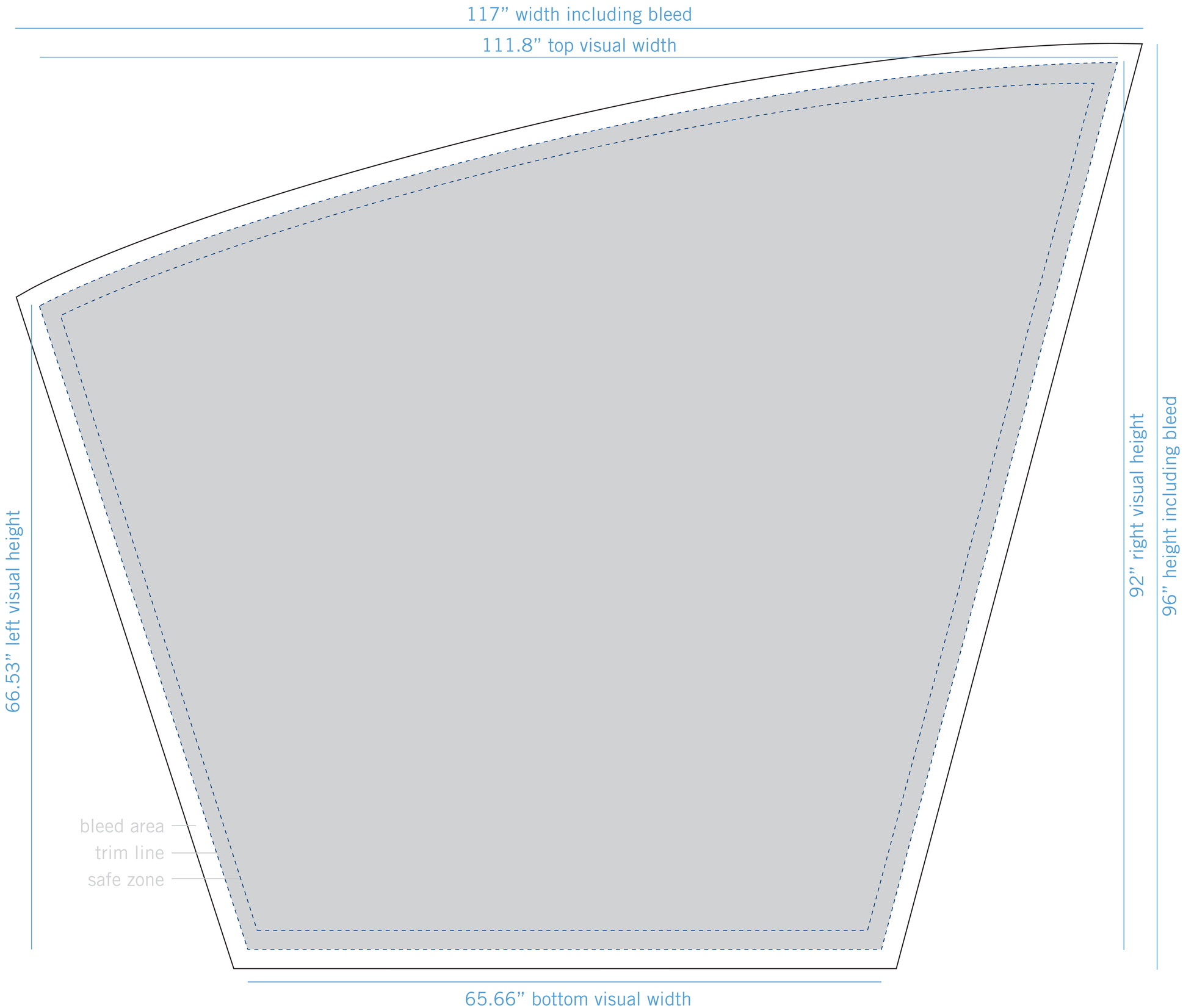

pulse kit 1

Header Graphic Template
Total graphic area: 48.836”w X 15.037”h
Total visual area: 47.836“w X 14.037”h
See template for curve dimensions

Please be sure to include the 1/2” bleed around the perimeter to compensate for the finishing of rigid graphics. The dotted line on the template represents the trim line.
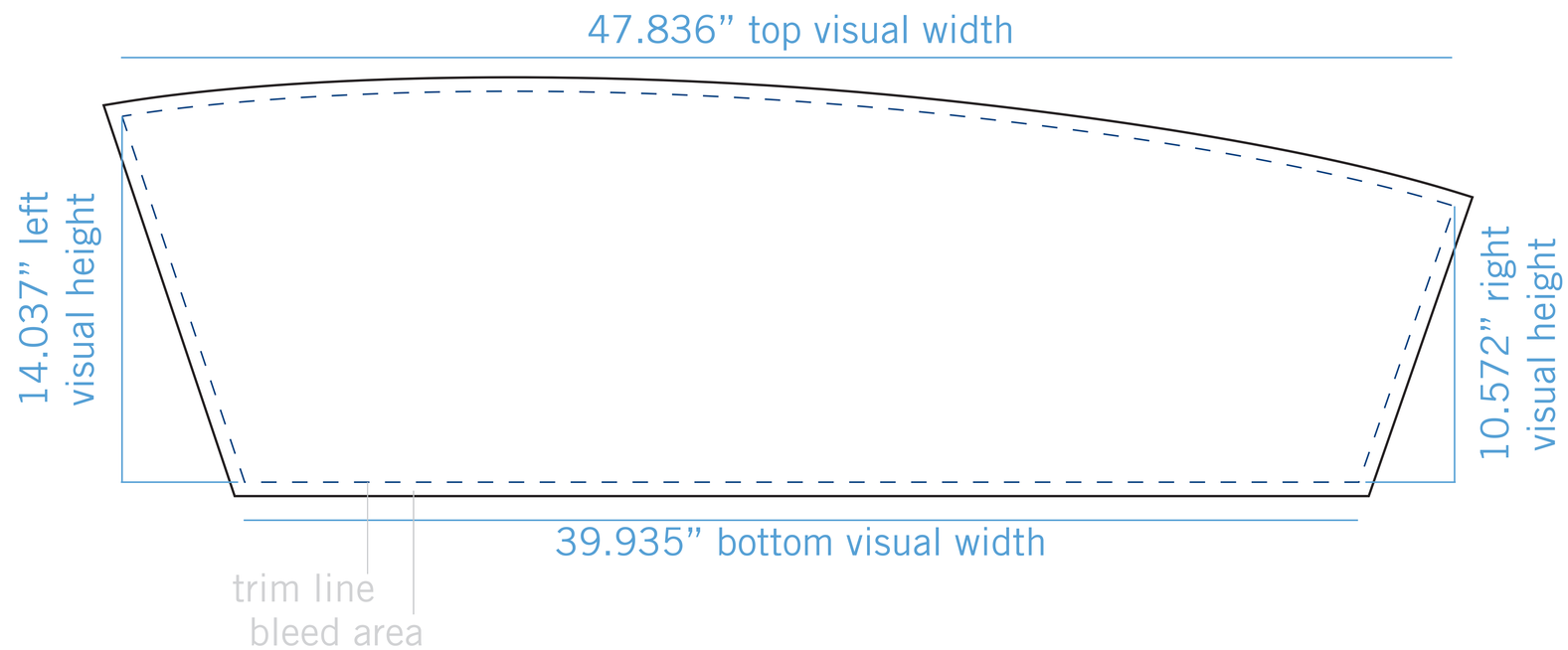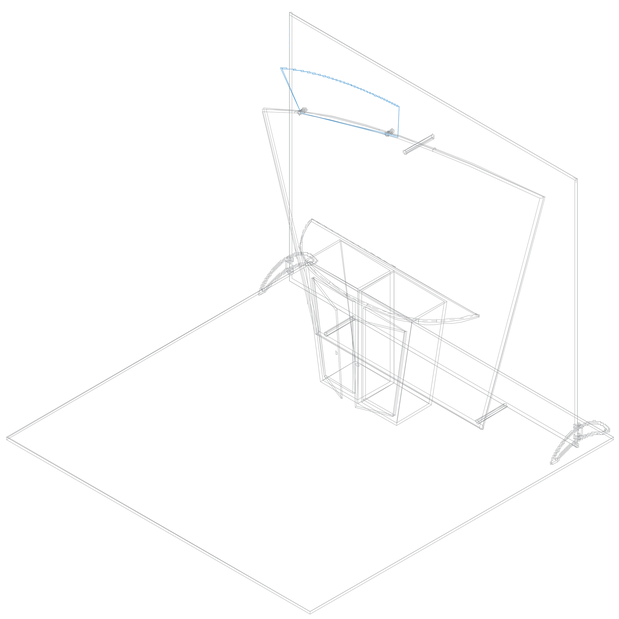
General Artwork Guidelines
- cmyk color mode
- do not embed images, supply them
- resolution must be 100-120 ppi
- all fonts must be created to outlines