AVIATOR (ID# C-PW-3D)
10’ X 42” PINWHEEL (OUTSIDE X3)

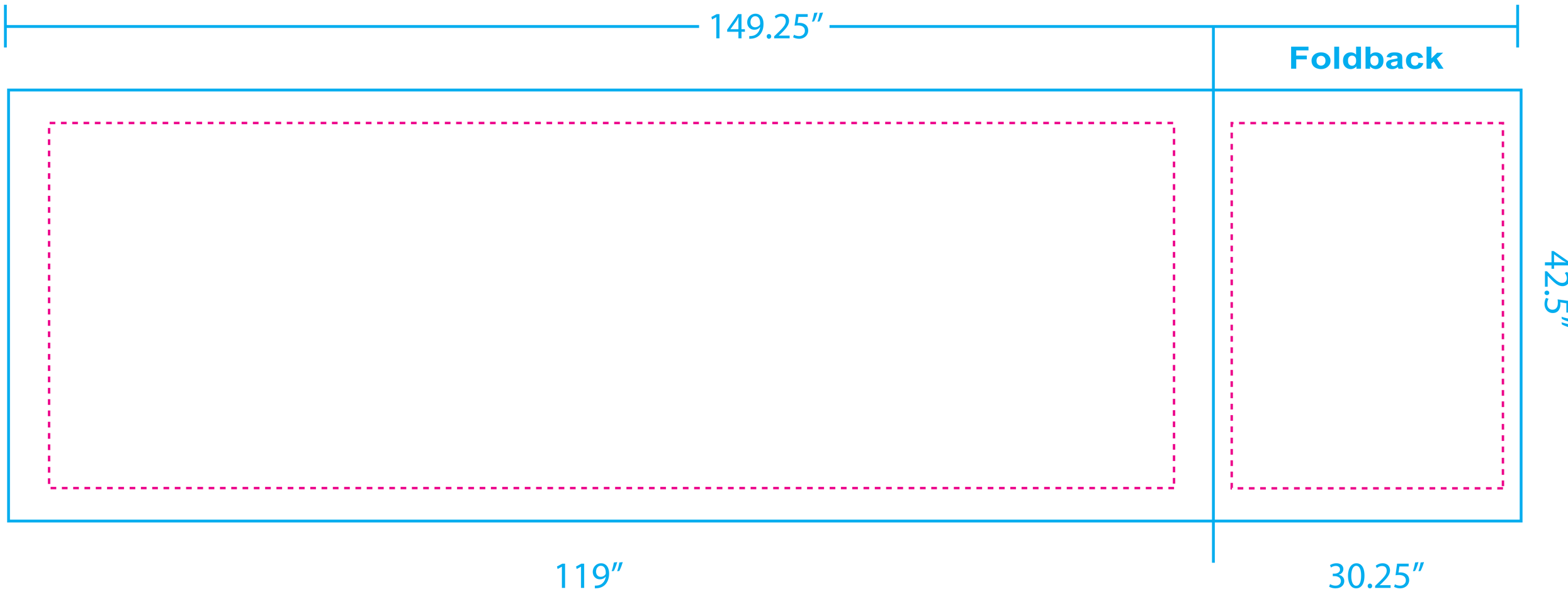

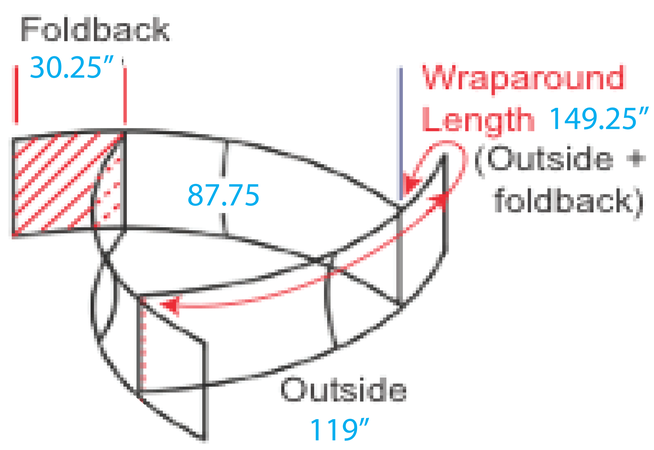

Final size: 149.25”(w) x 42.5”(h)
Live Area: 111”(w) x 36” (h) (28.75 x 36 foldback)