AVIATOR (ID# C-PW-3D)
12’ X 48” PINWHEEL (INSIDE X3)

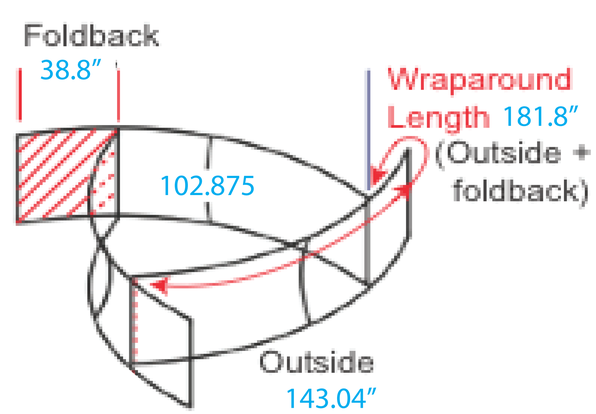

Final size: 102.875”(w) x 48.25”(h)
Live Area: 93”(w) x 42” (h)