AVIATOR (ID# C-PW-3D)
10’ X 36” PINWHEEL (OUTSIDE X3)

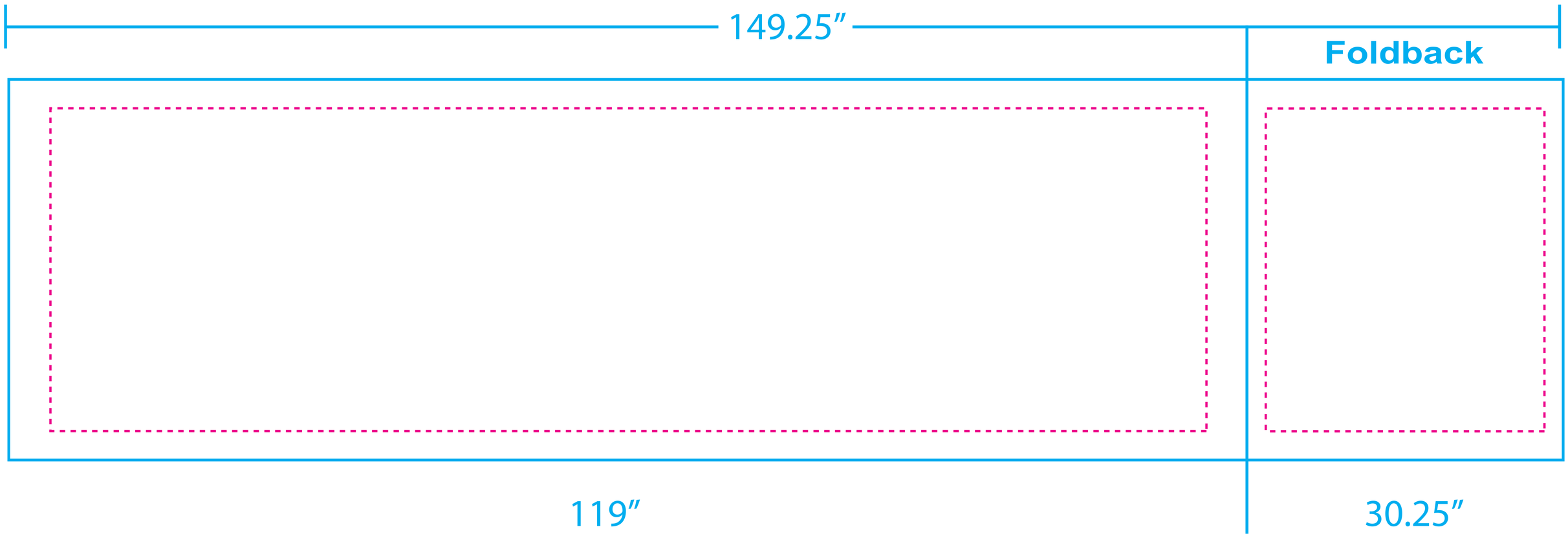

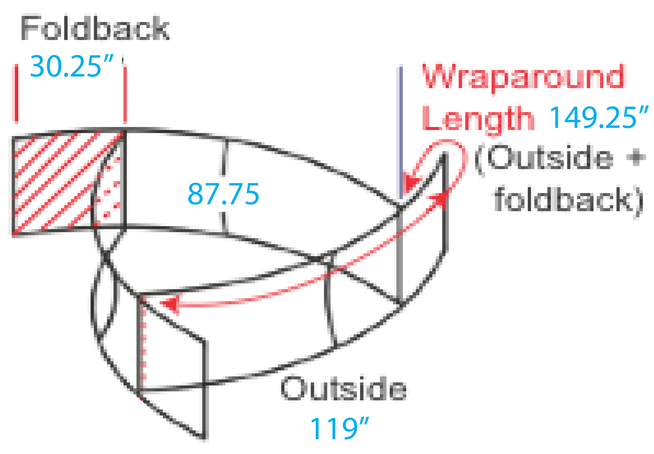

Final size: 149.25”(w) x 36.56”(h)
Live Area: 111”(w) x 31” (h) (28.75 x 31 foldback)